Agronomy Research Biosystem Engineering Special Issue 1, 75-84, 2012

Impact of immature willows stems chopping quality on the harmful emissions evaluation

A. Jasinskas, I. Ulozevičiūtė, E. Šarauskis and A. Sakalauskas

Aleksandras Stulginskis University, Faculty of Agricultural Engineering, Kaunas-Akademija, Studentu str. 15A, LT-53361 Kauno r., Lithuania;
e-mail: algirdas.jasinskas@asu.lt

Abstract. The analytical review of the experimental research results of energy plants preparation, burning efficiency and the emissions of harmful substances into the air while burning these plants, is presented in this paper. After the experimental study, immature (1–2 year of growth) willow (*Salix viminalis*) stems chaff chopping quality were observed. In truth, use of the drum chopping equipment prepared chaff fractional composition, and there were defined and calculated immature willow stems chaff of theoretical length (from 11.8 till 61.3 mm). They were presented and compared with the experimental research results of the low power boiler efficiency and harmful emissions into the air while burning energy plants – immature willow, chopped by the drum chopper of *Maral-125* combine. The test was carried out in the laboratory of the low power boiler, which is designed to burn wood, wood briquettes and large wood chaff. After determination of boiler efficiency and harmful substances (CO_2, CO, NO, NO_x) emissions into the environment while burning different lengths of willow chaff, it was concluded that the boiler developed about 66–86% of nominal boiler power, and pollution emissions concentration into the environment was lower when willow chaff of 49.2 mm length was burned.

Key words: immature willows, stems, chaff, chopping quality, burning, boiler power, pollution, harmful emissions.

Introduction

Fossil fuel is based on coal but, during the burning process, in addition to CO_2 many other materials are emitted into the atmosphere as well. For example, carbon (C) constitutes 80% of coal, 65% of oil and 45% of natural gas, whereas the remaining parts consists of hydrogen and other pollutants, such as sulphur, heavy metals and carcinogens (Scott, 2007). When fossil fuels burn, CO_2 and other pollutants are emitted into the atmosphere, contributing to the greenhouse effect and climate change.

The Earth's surface absorbs radiation diffused from the surface of the Sun. The energy is distributed between the atmosphere, hydrosphere, and lithosphere, and later sent back into space. The incoming solar radiation is balanced with the radiation which is sent back, and if something interferes into their inter-connection, or influences their distribution on the Earth, it might lead to climate change, or might also affect the Earth's temperature (IPCC. Climate Change, 2001). Because of their unique molecular structure, gases naturally causing the greenhouse effect, such as carbon dioxide (CO_2), water vapor (H_2O), ozone (O_3) and methane (CH_4), prevent the heat from returning to the space close to the Earth's surface (Friedman, 2008). This process is called the

greenhouse effect. When the concentration of the gases increases, the radiation is absorbed by the atmosphere and, in turn, heats the atmosphere and the surface of the Earth. The smaller the amount of heat that comes to space from the Earth, the stronger the greenhouse effect is (IPCC. Climate Change, 2001).

Energetics is an area of agriculture, involving energy resources, various kinds of energy production, transformation, transmission and consumption. The contemporary human can hardly imagine daily life without the contemporary energy resources. Only the rational utilization of the energy resources, obtained from the depth of the Earth, can ensure the future of society and the quality of life. However, the fossil fuel supplies are rapidly running out, the principles of energy distribution cause human poverty, threaten national independence, and increase the climate change. Therefore, new energy resources must be found which could help to protect our planet and the Universe.

The possibility to expand the use of some of the renewable energy sources in Lithuania is limited because of the countries geographical characteristics. As a result, the hydroelectric power resources are relatively modest in Lithuania, the wind farms are efficient to only exploit in those areas where the speed of the wind is strong enough, and only in the areas where the problems of the power transfer to the electricity grid are solved. What is more, rape cultivation for fuel requires relatively significant cultivation and production expenses. In addition, good soil is needed for rapes to grow, whereas willows adapt to diverse soil. Therefore, we believe that the best opportunities for developing bio-fuels are associated with fast-growing willows` cultivation, especially in the derelict soils which are prevalent in Lithuania. As a renewable energy source, other short rotation energy crops can be used, such as fast-growing poplar and aspens (The programme ..., 2006). However, willows are the most widely used, they have a great future and might take a significant place among energy crops which do not produce gases which increase the greenhouse effect or cause acid rains.

There are several reasons to evaluate the quality of the chopped chaff, but the most important and fundamental one is to satisfy the customers` wants. The costumer usually indicates the exact size of chaff (Hartmann et al., 2006). Thus, the amount of the particles of the size larger than 15–16 mm is often required to constitute 70–80% of the total chaff's mass, whereas the amount of the dust (when particles are smaller than 3 mm) should not exceed 3–5%. Other important reasons are high-quality production (taking into account boiler manufacturers` recommendations), a smooth boiler's exploitation (the chaff must be free of impurities, such as metal, stones, or the chaff should not consist of a particle which is too large, etc.), and boiler's maintenance as less frequent as possible (less ashes, dust, etc.) (Keoleian & Volk, 2005; Lemus & Lal, 2005):

When ensuring chaff's quality, the following problems usually arise:

- chaff's quality and origin (humidity, the amount of ash and impurities, etc.);
- chaff`s storage during its production and marketing (impurities, mushrooms, desiccation, etc.);
- chaff`s supply to the burning chamber (foul mechanisms, etc.);
- fuel's burning quality (large amount of harmful products because of the large quantity of dust, large ash-content, etc.).

Therefore, the question which arises is how the production of the high-quality fuel can be ensured? The answer is quite simple – the chaff's production should be controlled from the very beginning, and until the very end of the production process. Control of the production process should be involved, taking into account available standards (DD CEN/TS 15149-1:2006; Scholz et al., 2006), and investments should be made into the permanent improvement of the production process. All of this ensures the efficient production of ecological high-quality fuel. Therefore, the key points of high-quality fuel which should be identified and analyzed are as follows:

- the amount of impurities;
- particles` distribution in terms of the size;
- humidity;
- calorific content;
- bulk density.

Interest in willow cultivation for fuel has recently increased in Lithuania. The owners of the large boiler-houses claim that willow biomass is suitable for a wide use and that it can be bought up in unlimited amounts. Therefore, to expand willow cultivation is beneficial for Lithuanian farmers (Jasinskas & Scholz, 2008).

Considering the advantages of willow cultivation and use for fuel, further analysis and evaluation of willow harvesting and preparation technologies, as well as technologies which could be adapted to the Lithuanian climate, are necessary. In addition, it is useful to evaluate both, mature (3–4 years of growth) and immature willows (1–2 years of growth) preparation for biofuel, i.e. chopping possibilities, as well as to determine qualitative factors of chopping and boiler efficiency and harmful emissions evaluation while chaff burning.

The aim of this study was to evaluate the process of immature willow's (1–2 years of growth) chopping with a drum chopper and to determine the qualitative factors of chopping and boiler efficiency and harmful emissions evaluation.

Materials and methods

Analytical evaluation of the mass movement speed influence on stem's chopping length

The cut and multiplexed mass layer of the plant stem of the speed v_0 is carried to the chopping drum which chops the mass. The speed of the mass movement directly depends on the linear speed of the supply drums. It was determined that the movement speed of the upper layer of the mass has to be greater than the speed of the lower layer ($v_{01} > v_{02}$). As a result, the mass is pressed to the flat of the blade harder (Fig. 1) (Krasniczenko, 1981).

The chopper drum's revolution rate 1 is 913 min^{-1}, transporter's 7 driving drum's 8 revolution rate is transformed by electric power rate's transducer 5, the number of knives is 8 pieces. Chaff's theoretical length depends on the driving drum's 8 (the largest theoretical length of the chaff is l_{theor} = 61 mm) revolution rate. Electric motor 4 spins the chopper's gears (Fig. 1).

Analyzing the drum chopper's work, it is possible to see that the speed of the upper layer of the mass is equal to the speed of the upper layer of supply $v_{01} = v_1$. Therefore, v_{01}, ms^{-1}:

$$v_{01} = \frac{\pi n_1 r}{30}, \quad (1)$$

where: n_1 – revolution rate of the upper drum, min^{-1},
r – drum radius, m.

The movement speed of the lower layer of the mass is calculated analogically. Therefore, the movement speed of the lower layer of the mass is equal to the speed of the lower drum of the supply $v_{02} = v_2$.

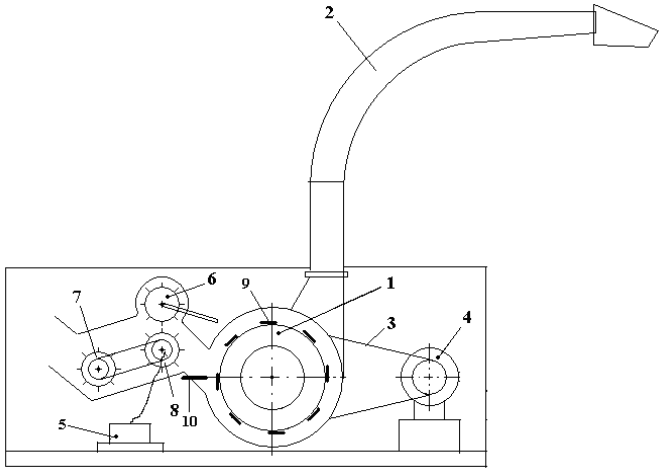

Fig. 1. Harvester's *Maral – 125* drum chopper's scheme: 1 – chopping drum; 2 – pneumatic transporter for the chopped mass 3 – belt gear; 4 – electric motor; 5 – electric power rate transducer; 6 – upper drum for plants pressing; 7 – transporter; 8 – lower drum for plants pressing; 9 – knives; 10 – counter-knife plate.

Krasniczenko and other researchers investigated non-woody plant's stems chopping process using the drum chopper and estimated the main rates of the mass being chopped (Krasniczenko, 1981; Sirvydis, 2001). One of the rates is that chopping theoretical length (mm) depends on the movement speed of the mass layer v_{sl}, the number of knives z and revolution rate of the drum n:

$$l_{theor} = \frac{v_{sl} \cdot 60000}{nz} \quad (2)$$

where: l_{theor} – theoretical length, mm;
v_{sl} – speed of the mass layer's movement, m s^{-1};
n – drum chopper's revolution rate, min^{-1};
z – the number of knives on the drum, pieces.

With reference to the present dependence, the influence of the mass movement speed on stems` chopping length can be determined, i.e. by shifting the drum chopper's *Maral-125* work modes (revolution rate of the drum chopper), and theoretical length of the chaff can be estimated.

Methodology of the chaff fineness and bulk density evaluation

The plant stem chaff fineness used for fuel must be determined by refinement on the basis of boilers used in the combustion chamber, chaff transport equipment and storage requirements. Furnaces with the required fineness of chaff obtained the high combustion efficiency. There was no problem with chaff transport to the furnaces and their supply from storages.

Immature willows (1–2 years of growth) stems chaff, chopped by the drum chopper, was used in the experiment. The quality of stem chaff and chaff fineness was defined by the stem chaff fractional composition determination methodology. A methodology used for determining the fractional composition is based on European Standard (DD CEN/TS 15149-1:2006; Scholz et al., 2006). About 5 kg of chaff sample was passed via a 40 mm diameter sieves with round holes with a diameter of: 63 mm, 45 mm, 16 mm, 8 mm and 3.15 mm. While screening each sample the sieve set was rotated 30 times within a semicircle in a horizontal plane. The mass remaining on sieves was weighed separately. The mass left on the different sieves was weighed and calculated in percents. Each test was repeated 3 times.

The bulk density of chopped plant stems was determined in the special cylinder (which capacity was 5.7 dm^3) in three replications. The container was filled with the chaff by free filling without any pressure. After filling the container to its upper edge, chaff was weighed and after estimation of its moisture content the dry material density (d.m.) was calculated.

Methodology of the harmful emissions evaluation by burning immature (1–2 year's growth) willow stem's chaffs of different thinness

Fuel combustion and concentrations of emitted pollutants, while using solid biofuels to heat the boilers, depend not only on the type of the fuel, but on its preparation quality as well. Immature, two years of growth willow's (*Salix Viminalis*) stems were chopped with the forage harvester's drum chopper (Fig. 1) in order to determine the influence of the willow's stems` chaff preparation quality (willow chopped into the chaffs of the different length) on combustion and pollutants` formation.

The research was carried out at the laboratory of Aleksandras Stulginskis University. During the experiment, a chaff was being burnt in the small power's boiler (10 kW), which was adapted to burn a solid biofuel. Laboratory equipments and research methodology used for the present research are the same as in the previous research (Jasinskas et al., 2011**)**.

Results and discussion

The influence of the mass movement speed on stems` chopping length

With reference to the equation (2) which was received from an analytical evaluation of the influence of the mass movement speed on stems chopping length, the theoretical length of the chaff, by shifting drum chopper's *Maral-125* work modes (revolution rate of the drum chopper) was estimated. In addition, the medium mass movement speed was estimated with different revolution rates of the mass supply drum (Table 1).

Analyzing results, it is possible to see that the theoretical length l_{theor} of the chaff increases with the growth of the revolution rate of the mass supply drum. Theoretical length of the chaff shifts (grows) from 11.8 mm (when the revolution rate of the mass supply drum is the smallest 98.0 min^{-1}) to 61.31 mm (when the revolution rate of the mass supply drum is the largest 509.33 min^{-1}).

Table 1. Drum chopper`s *Maral-12*5 chaff`s theoretical length

Average rotation frequency of the lower drum for plants pressing n_2, min^{-1}	Average speed of mass movement V_{sl}, m s^{-1}	Theoretical length of the chaff l_{teor}, mm
98.00	1.44	11.80
203.67	2.98	24.52
305.33	4.47	36.75
408.67	5.99	49.19
509.33	7.46	61.31

Determination of immature willow chaff's thinness and bulk density

The results of the willow chaff's (1–2 years of growth) thinness (fractional composition) received by applying methodology used in the European Union is placed in Table 2.

Table 2. Estimation of willow stem's chaff's fractional composition (according to the methodology used in the EU countries)

Average theoretical length of the chaff l_{theor}, mm	Fractional composition left on the sieves, %					
	Diameter of holes, mm					Dust
	63	45	16	8	3.15	
11.8	0.70	7.73	47.50	17.80	21.37	4.90
24.5	0.23	3.23	54.77	27.97	12.63	1.17
36.7	1.27	10.43	60.73	22.20	4.93	0.44
49.2	6.93	11.43	62.97	16.33	2.17	0.17
61.3	35.10	10.60	44.80	8.34	0.83	0.33

After the willow stem's chaff's quality had been evaluated (according to the methodology used in the European Union) using sieve sets with round holes of a different diameter, it was determined that with the growth of the theoretical length of the chaff l_{theor}, its fractional composition grows. With reference to the methodology of the research being carried out, the main characteristics of the chaff's thickness are the

chaff's fraction and the amount of dust which concentrate on the sieve with the holes of 16 mm diameter.

It was determined that when the chaff's theoretical length shifts from 11.8 mm to 49.2 mm, the largest chaff's fraction concentrates on the sieve with the round holes of the diameter 16 mm and grows from 47.50% to 62.97% accordingly.

The smallest amount of the chaff concentrates on the sieve (44.80%), when chaff's theoretical length is the largest (l_{theor} = 61.3 mm). However, a relatively large amount of the chaff's mass (35.10%) concentrates on the sieve with the holes of the largest (63 mm) diameter. The largest amount of the dust was when chaff's theoretical length was the smallest l_{theor} = 11.8 mm – 4.90%, whereas the smallest amount of the dust was when chaff's theoretical length was l_{theor} = 36.7–61.3 mm – from 0.44 to 0.17%. Thus, it is also possible to claim that when the willow chaff's theoretical length is the smallest, willow stems are chopped too much. Therefore, producing biofuel, it is beneficial to chop willow stems into the larger chaffs, i.e. of the theoretical length l_{theor} = 24.5 – 61.3 mm (Table 2).

After evaluating the chopping quality of the chopped immature (1–2 years of growth) willow's stems, it is possible to claim that chopper *Maral-125* is suitable for chopping willow's stems of 1 and 2 years of growth, i.e. when the theoretical length of the chaff is 24.5–61.3 mm.

Immature willow's chaff's bulk density is placed in Table 3. From the data placed in the Table 3, it is possible to see that when willow chaff's theoretical length is l_{theor} = 11.8–61.3 mm, chaff's bulk density ranges from 117.3 to 144.8 kg m^{-3} d.m. The smallest bulk density was when the theoretical length of the chaff was the smallest (117.3 kg m^{-3} d.m.), whereas the largest – when the theoretical length was the largest (144.8 kg m^{-3} d.m). With reference to the results of the present research, the sizes of the willow stem's chaff's storages and areas can be estimated.

Table 3. Bulk density of the willow stem's chaff

Average theoretical length of the chaff l_{theor}, mm	Moisture content of the chaff, %	Bulk density, kg m^{-3}
11.8	43.2±0.7	206.5±15.1 (117.3 d.m.)
24.5	43.2±0.7	233.4±15.7 (132.6 d.m.)
36.7	43.2±0.7	211.2±16.9 (119.9 d.m.)
49.2	43.2±0.7	216.4±19.2 (122.9 d.m.)
61.3	43.2±0.7	254.9±21.3 (144.8 d.m.)

The harmful gas emissions evaluation by burning immature (1–2 year's growth) willow's stem's chaffs of different thinness

The present research revealed that the following harmful gas emissions form during the burning process: dioxide (CO_2), carbon monoxide (CO), sulphur dioxide (SO_2), nitric oxide (NO) and nitric monoxide (NO_x). The data of the gas emissions have been placed in Table 4.

Table 4. The harmful gas emissions which formed by burning different thinness willow's (1–2 years of growth) stem's chaffs

No	Moisture content of the chaff, %	Chopper, Theoretical length of the chaff l_{theor}, mm	CO_2 %	CO mg·m^{-3}	NO mg·m^{-3}	NO_x mg·m^{-3}	Power of the boiler, kW
1.	43.2±0.7%	*Maral-125* (11.80 mm)	1.9	2,023	52	82	7.7
2.			1.3	2,409	39	62	8.2
3.			1.1	2,309	38	60	10.2
4.			0.9	1,467	30	47	9.3
5.			0.8	861	20	31	7.7
Average			**0.8**	**1,813.8**	**35.8**	**56.4**	**8.6**
1.	43.2±0.7%	*Maral-125* (24.52 mm)	2.1	3,391	59	93	8.2
2.			1.6	2,085	44	70	8.3
3.			1.3	1,461	36	57	10.2
4.			1.2	1,102	31	48	8.8
5.			1.1	861	22	35	6.3
Average			**1.5**	**1,780.0**	**38.4**	**60.6**	**8.4**
1.	43.2±0.7%	*Maral-125* (36.75 mm)	2.1	2,565	61	97	7.1
2.			1.9	2,253	48	76	8.9
3.			1.6	1,878	58	91	8.9
4.			1.3	1,175	42	67	8.9
5.			1.1	728	28	45	7.0
Average			**1.6**	**1,719.8**	**47.4**	**75.2**	**8.2**
1.	43.2±0.7%	*Maral-125* (49.19 mm)	1.2	1,068	32	50	7.5
2.			1.1	913	25	40	8.7
3.			0.7	645	18	29	8.7
4.			0.7	442	13	21	7.6
5.			0.7	381	16	26	5.7
Average			**0.9**	**689.8**	**20.8**	**33.2**	**7.6**
1.	43.2±0.7%	*Maral-125* (61.31 mm)	1.3	1,495	50	79	5.0
2.			1.4	1,360	39	61	5.1
3.			1.1	1,105	44	70	8.0
4.			-	-	-	-	7.9
5.			-	-	-	-	7.2
Average			**1.3**	**1,320.0**	**44.3**	**70.0**	**6.6**

When burning immature (1–2 years of growth) willows, the plants of the medium chaff's length (chaff's length was 24.5–36.7 mm) – 1.5–1.6%. Emitted the largest amount of dioxide (CO_2), whereas burning thinner willow chaffs (chaff's length was 11.8–36.7 mm) – 1,720–1,814 mg m^3, the largest amount of the carbon monoxide (CO) concentration was emitted. Chaff of the length 49.2 mm – 690 mg m^{-3} was burning the best and emitted the least amount of CO. While burning different length chaffs, emissions of sulphur dioxide SO_2 were not noticed.

While burning different length chaffs and evaluating nitric monoxide (NO_x) and nitric oxide (NO) emissions, it was noticed that the largest amount of the nitric oxide emissions was being released by burning medium length chaffs (chaff's length was 36.7 mm) – 75.2 mg m^{-3} (Table 4), whereas burning larger length willow chaffs

(chaff's length 49.2 mm), resulted in the smallest amount of the nitric oxide emissions being emitted and reached 33.2 mg m^{-3}.

Analysing boiler efficiency and harmful gas (CO_2, CO, NO, NO_x) emissions into the environment, which formed by burning different length willow (1–2 years of growth) chaffs, the boiler's power's shift (at the time of the load's burning) was determined as well. It was concluded that the boiler developed about 66–86% of nominal boiler power, and pollution emissions concentration into the environment was lower when willow chaff of 49.2 mm length was burned.

To sum up, it is possible to claim that the thinner length willow chaffs burn worse and are more harmful for the environment. Moreover, when burning willow chaffs of the medium and larger length, the environment is being polluted less.

Conclusions

1. With reference to the analytical plant chopping research, it is possible to claim that chaff's theoretical length l_{theor} grows from 11.8 mm (when revolution rate of the mass supply drum is the smallest – 98.0 min^{-1}) to 61.31 mm (when revolution rate of the mass supply drum is the largest – 509.33 min^{-1}).
2. After the chaff's thickness had been evaluated according to the methodology used in the European Union, it was determined that when chaff's theoretical length shifts from 11.8 mm to 49.2 mm, the largest fraction of the chaff concentrates on the sieve with round holes of the diameter 16 mm and grows correspondingly from 47.50% to 62.97%. The largest amount of the dust was when the chaff's theoretical length was the smallest l_{theor} = 11.8 mm – 4.90%, whereas the smallest was when the chaff's theoretical length was l_{theor} = 36.7–61.3 mm – from 0.44% to 0.17%.
3. When evaluating immature willow stems` chopping quality (1–2 years of growth) using the chopper *Maral-125*, it is possible to claim that this chopper is suitable for chopping immature willow stems, when the theoretical length of the chaff is 24.5–61.3 mm.
4. It was determined that when the willow chaff's theoretical length is l_{theor} = 11.8–61.3 mm, chaff's bulk density ranges from 117.3 to 144.8 kg m^{-3} d.m. With reference to the results of the present research, the sizes of the willow stem's chaff's storages and areas can be estimated.
5. It was determined that when burning different length immature willow chaffs the plants of the medium chaff's length (chaff's length was 24.5–36.7 mm – 1.5–1.6%.) emitted the largest amount of carbon dioxide (CO_2), whereas the largest amount of the carbon monoxide (CO) concentration was emitted by burning thinner length willow chaffs (chaff's length was 11.8–36.7 mm) – 1,720–1,814 mg m^{-3}. Willows chaff of 49.2 mm length was burning the best and emitted the smallest amount of CO.
6. When burning different length immature willows and evaluating nitric monoxide (NO_x) and nitric oxide (NO) emissions, it was noticed that the largest amount of nitric oxide emissions was being released by burning medium length willow chaffs (chaff`s length was 36.7 mm) – 75.2 mg $m^{-3}$, whereas burning larger length willow chaffs (chaff`s length 49.2 mm) resulted in the smallest amount of nitric oxide emissions being released and reached 33.2 mg m^{-3}.

7. The boiler developed about 66-86% of nominal boiler power, and when burning willow chaffs of the medium and larger length, the environment is being polluted less.

References

DD CEN/TS 15149-1:2006. Solid biofuels – Methods for the determination of particle size distribution. Part 1: Oscillating screen method using sieve apertures of 3.15 mm and above.

Friedman, T. L. Hot, Flat and Crowded. 2008. Why we need a green revolution - and how it can renew America. Farrar, Straus and Giroux, New York, 2008.

Hartmann, H., Böhm, T., Jensen, P. D., Temmerman, M., Rabier, F. & Golser, M. 2006. Methods for size classification of wood chips. *Biomass & Bioenergy* **30**(11), 944–953.

IPCC. Climate Change 2001: The Scientific Basis. Contribution of Working Group I to the Third Assessment Report of the Intergovernmental Panel on Climate Change. Cambridge University Press, Cambridge, United Kingdom and New York, NY, USA, 2001.

Jasinskas, A. & Scholz, V. 2008. Evaluation of technologies of plant biomass harvesting and preparation for fuel: coursebook. Raudondvaris, 74 pp. (in Lithuanian).

Jasinskas, A., Ulozeviciute, I., Sarauskis, E., Sakalauskas, A., Puskunigis, M. 2011. Determination of energy plant chopping quality and emissions while burning chaff. *Agronomy Research*, Vol. 9, special issue 1, p. 49–61.

Keoleian, G.A. & Volk, T.A. 2005. Renewable energy from willow biomass crops: Life cycle energy, environmental and economic performance. *Crit. Rev. Plant Sci.* **24**, 385–406.

Krasniczenko A, B. 1981. Technical manual of agricultural machinery. Moscow, 1981, T.2, 862 p.

Lemus, R. & Lal, R. 2005. Bioenergy crops and carbon sequestration. *Crit. Rev. Plant Sci.* **24**, 1–21.

Scholz, V., Lorbacher, R. F. & Spikermann, H. 2006. Stand der Pflanz – und Erntetechnik für Kurzumtriebsplantagen: Anbau und Nutzung von Bäuen auf landwirtschaftlichen Flächen 1. Fachtagung, Tharandt, 6. und 7. November, 2006. S. 149–156.

Scott, D.S. Smelling Land: 2007. The hydrogen defense against climate catastrophe. Enhanced Edition ed. Canadian Hydrogen Association (www.h2.ca.).

Sirvydis J. 2001. Grass forage production: monograph. Raudondvaris, 186 pp. (in Lithuanian).

The programme of industrial biotechnologies development in the Lithuania in 2006–2010. 2006. Government of the Republic of Lithuania. Vilnius, 8 pp. (in Lithuanian).